LACELA

Product:Die grinder Art.No.202507

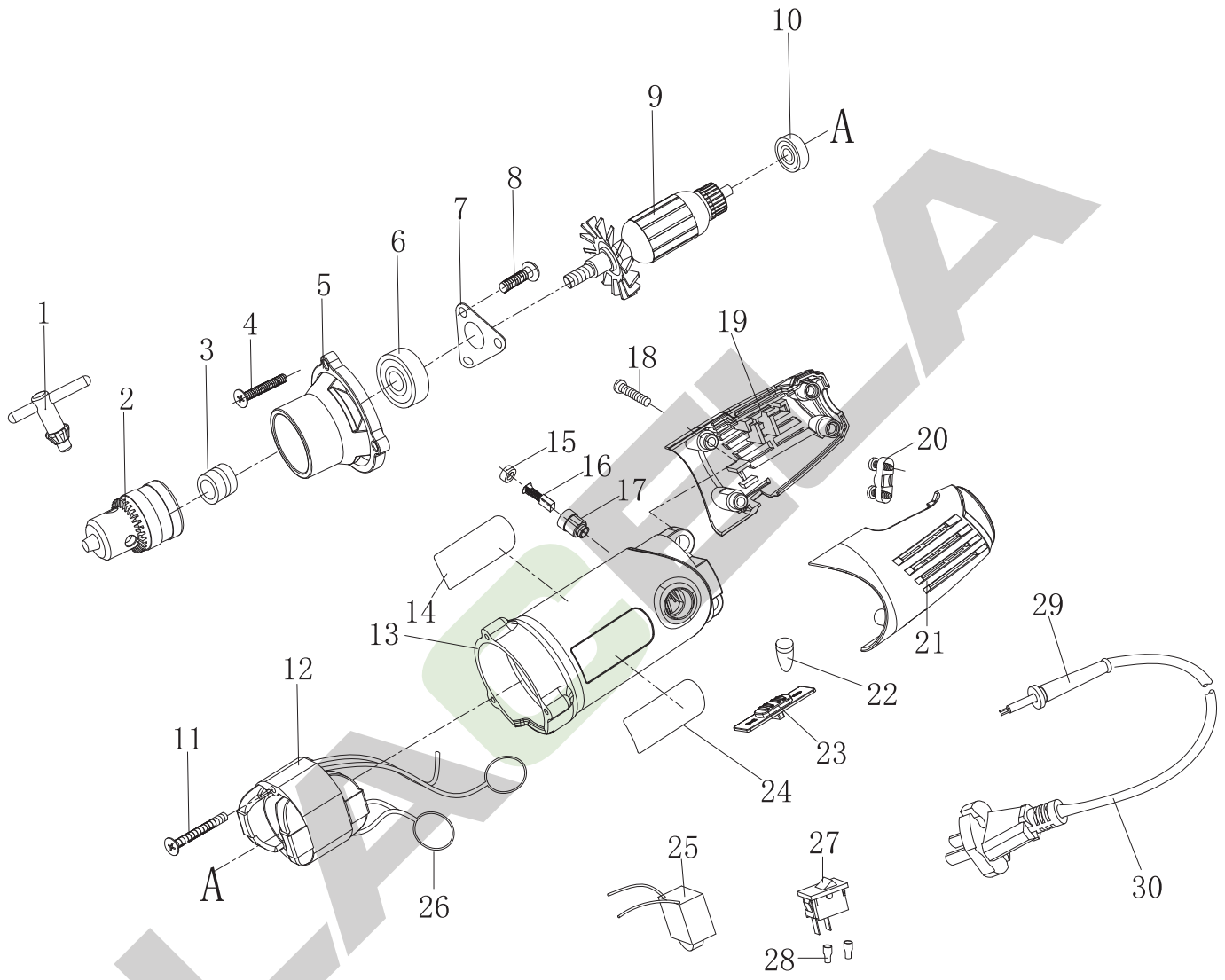

Version No.	D	Enable Time	2022.9

LACELA

Product:Die grinder Art.No.202507

No.	Part Name(Chinese)	Part Name(English)	Code	Qty	No.	Part Name(Chinese)	Part Name(English)	Code	Qty
1	钻夹头钥匙	Chuck Key	10304001022	1					
2	钻夹头	Chuck	10304001024	1					
3	隔套	Spacer	10306002004	1					
4	自攻螺钉ST4×14	Screw ST4×14	30202019	3					
5	头壳	Bearing Housing	10201004015	1					
6	轴承6000	Bearing 6000	30104003	1					
7	轴承压盖	Bearing Cap	10401002005	1					
8	带平弹垫螺钉M4×10	Screw M4×10	30201004	3					
9	转子	Armature	10502001020	1					
10	轴承607	Bearing 607	30104019	1					
11	螺钉ST4×45	Screw ST4×45	30202043	2					
12	定子	Stator	10501001016	1					
13	机壳	Housing	10101001323	1					
14	铭牌	Nameplate	20302007521	1					
15	刷握盖	Brush Cap	10606001002	2					
16	碳刷	Carbon Brush	10605001001	4					
17	刷握	Brush Holder	10606001001	2					
18	自攻螺钉ST4×18	Screw ST4×18	30202027	4					
19	右后罩	Right Rear Cover	10101003014	1					
20	电缆压板	Cord Anchor	10101011123	1					
21	左后罩	Left Rear Cover	10101003015	1					
22	塑料接线帽4	Connection Rod	30802007	1					
23	开关推钮	Switch Push Button	10101007006	1					
24	商标	TradeMark	20402007119	1					
25	调速器	Speed Controller	10601002009	1					
26	拉簧	Spring	10607001002	2					
27	开关	Switch	10601001204	1					
28	保护套(弯)4.8	Protection Sleeve 4.8	30802012	1					
29	电缆护套	Cord Sleeve	10102001043	1					
30	电源线 2×0.75	Cord 2×0.75	10602006130	1					

Version No.	D	Enable Time	2022.9